REINFORCING:
SINGLE LINE OF STEEL WIRE FABRIC HAVING AN AREA OF NOT LESS THAN 0.12 SQ.IN. PER FOOT OF HEIGHT.

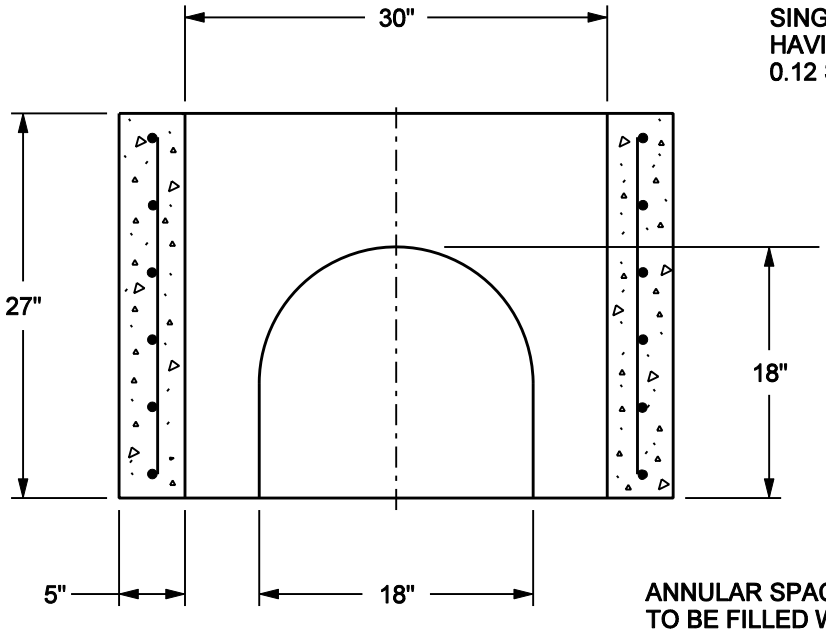

TYPICAL RISER CUT OUT

ANNULAR SPACE AROUND PIPE REQUIRED TO BE FILLED WITH BRICK & MORTAR. TYPE N AIR ENTRAINED CONCRETE PLASTER COATED MIN. 1/2" THICK INTERIOR & EXTERIOR OF STRUCTURE TO A SMOOTH FINISH. ALL PIPES TO BE TRIMMED FLUSH WITH THE INTERIOR WALL

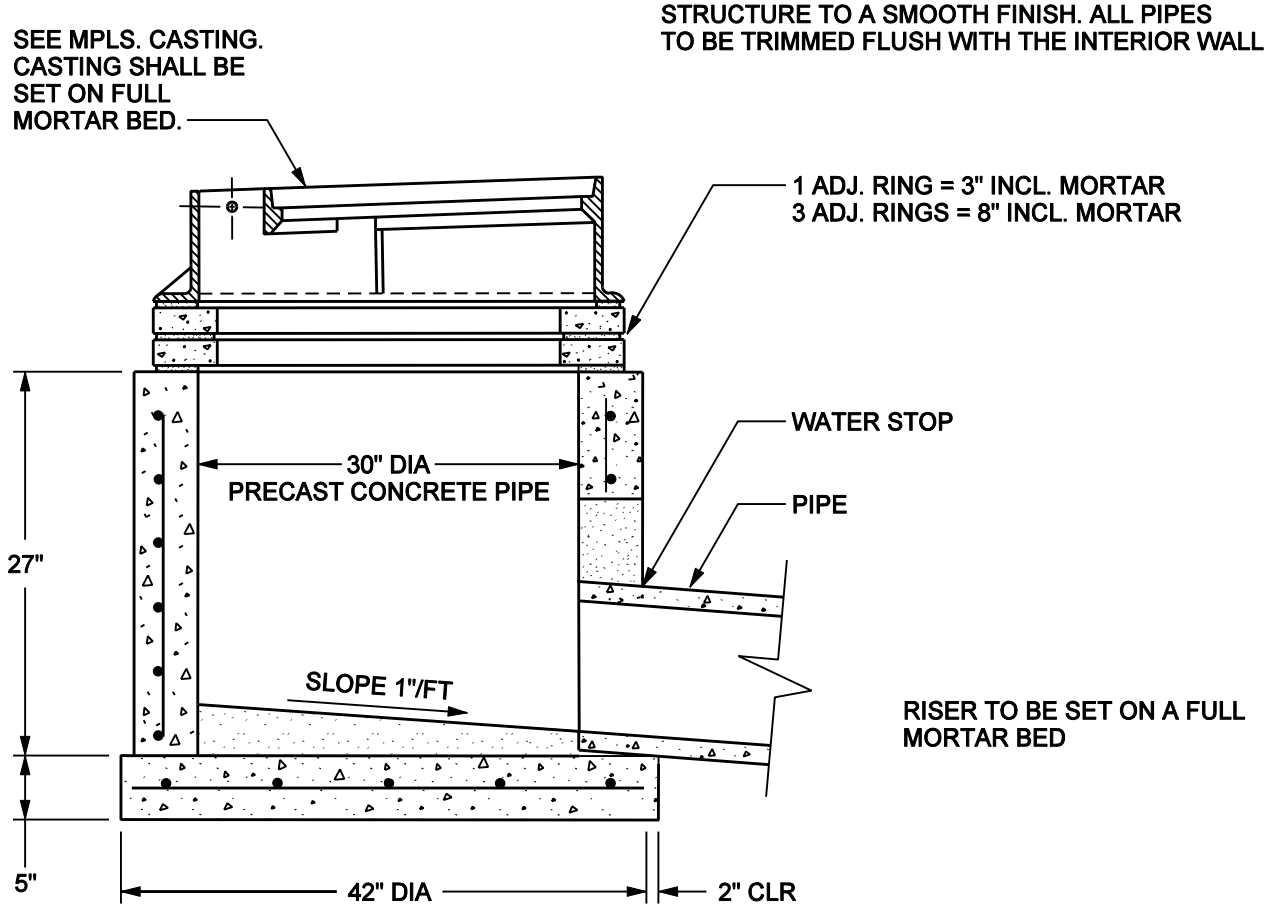

RISER TO BE SET ON A FULL MORTAR BED

MINNEAPOLIS STANDARD CB POT
MNDOT DESIGN N ONLY

MNDOT SPEC. REF. 2506
DESIGN N MNDOT 4003B
NOT TO SCALE

MINNEAPOLIS DEPARTMENT OF PUBLIC WORKS		PRECAST CATCH BASIN POT	STANDARD PLATE NO. SEWR-1008-R1
DRAWN: DCD	DATE: 12/09		
APPROVED: HRS	DATE: 12/09		