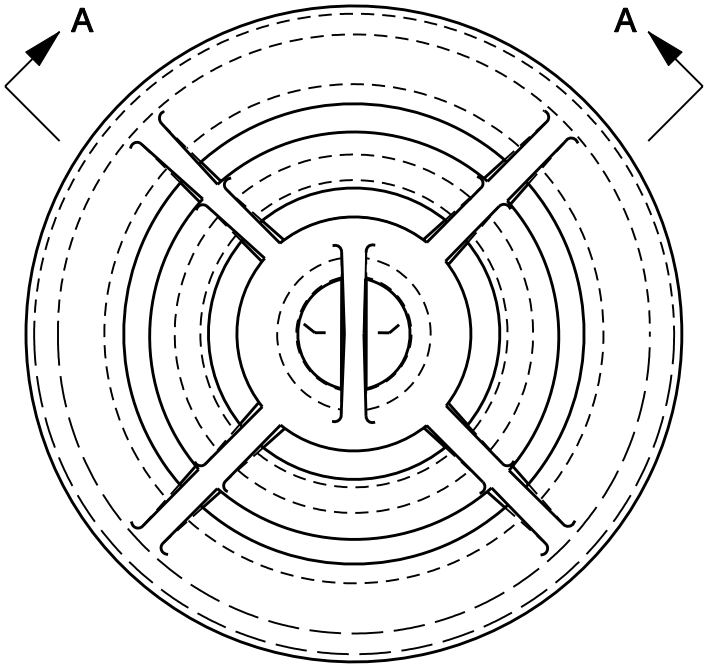

PLAN

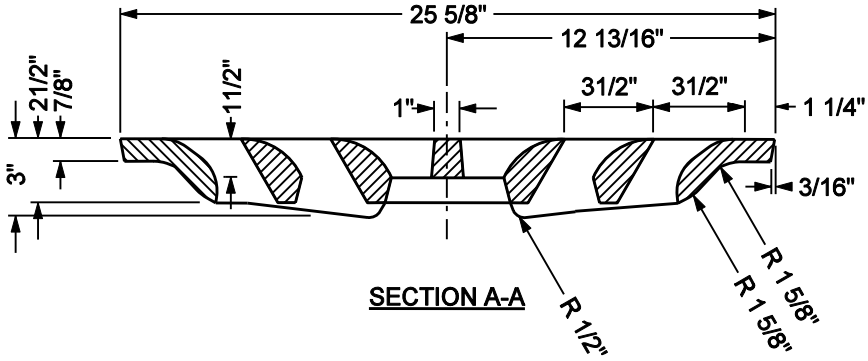

SECTION A-A

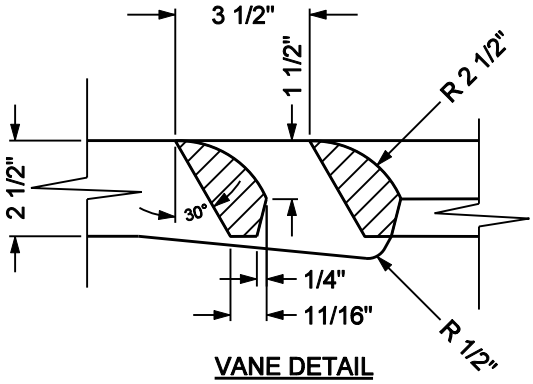

VANE DETAIL

NOTES:
MINNEAPOLIS ALLEY INLET GRATE
MATERIAL: GRAY IRON ASTM A-48

MINNEAPOLIS CUSTOM
MNDOT SPEC. REF. 2506
MODIFIED MNDOT 4154B
NOT TO SCALE

MINNEAPOLIS DEPARTMENT OF PUBLIC WORKS		CIRCULAR VANE GRATE	STANDARD PLATE NO. SEWR-2003
DRAWN: ZTT	DATE: 12/02		
APPROVED: HRS	DATE: 12/06		