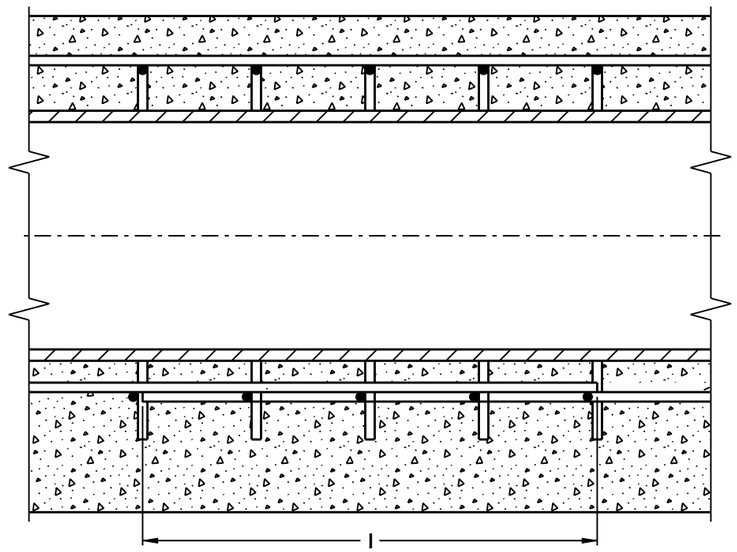

LONGITUDINAL SECTION

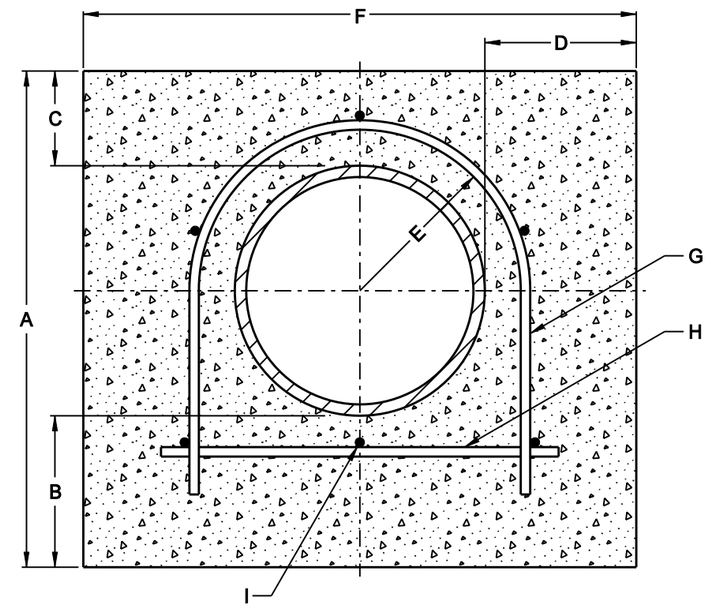

TRANSVERSE SECTION

PIPE SIZE (IN.)	A MIN. (IN.)	B (IN.)	C (IN.)	D (IN.)	E (IN.)	F MIN. (IN.)	G	H	I MIN.	YDS. CONC. PER FT.	LBS. STEEL PER FT.
4	15	6	4	7	4	19	#3 BAR, 6" O.C., 23" LONG, 4" R	#3 BAR, 6" O.C., 10" LONG	6 - #3 BARS, 12" OVERLAP	0.08	5
6	17	6	4	7	5	21	#3 BAR, 6" O.C., 28" LONG, 5" R	#3 BAR, 6" O.C., 12" LONG	6 - #3 BARS, 12" OVERLAP	0.08	5
8	22	8	5	8	6.5	25	#4 BAR, 6" O.C., 39" LONG, 6.5" R	#4 BAR, 6" O.C., 17" LONG	6 - #4 BARS, 12" OVERLAP	0.12	10
12	26	8	5	8	8.5	29	#4 BAR, 6" O.C., 49" LONG, 8.5" R	#4 BAR, 6" O.C., 21" LONG	6 - #4 BARS, 12" OVERLAP	0.16	12

MINNEAPOLIS
DEPARTMENT OF PUBLIC WORKS

DRAWN: TDS | DATE: 1/1/12
APPROVED: RCE | DATE: 1/1/12

REINFORCED CONCRETE ENCASEMENT FOR 4", 6", 8" AND 12" WATERMAINS

STANDARD PLATE NO. WATR-3000A-R1

NOT TO SCALE